MFCD_RW - ROUND CEILING DIFFUSER & MFCDD - CEILING DIFFUSER DAMPER

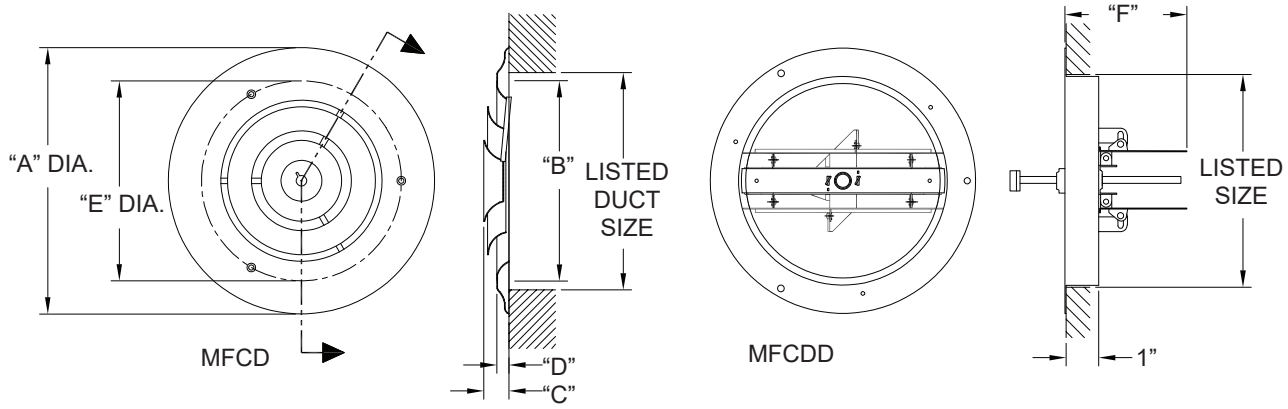

- **Heavy Gauge Steel Construction**
- **360° Air Deflection**
- **Finish: White**

Round Ceiling Diffuser

SIZE	"A"	"B"	"C"	"D"	"E"	"F"
6"	10	5-11/16	1-1/8	11/16	6-1/2	3-3/8"
8"	12	7-11/16	1-1/4	11/16	8-1/2	4-3/8"
10"	14	9-11/16	1-3/8	11/16	10-1/2	5-7/16"
12"	16	11-11/16	1-3/8	11/16	12-1/2	6-7/16"

Round Ceiling Diffuser

Face Velocity		295	395	490	590	690	785	885	985
Pressure Loss (In H_2O)		0.006	0.010	0.015	0.022	0.030	0.039	0.050	0.061
6" A_k=0.135	cfm	40	53	66	80	93	106	119	133
	throw (ft)	2.0	2.5	3.0	3.5	4.0	4.5	5.0	5.5
8" A_k=0.225	cfm	66	89	110	133	155	177	199	222
	throw (ft)	2.0	3.0	3.5	4.5	5.0	5.5	6.5	7.0
10" A_k=0.335	cfm	98	132	164	198	231	263	296	330
	throw (ft)	2.0	3.5	4.5	5.0	6.5	7.5	8.5	9.0
12" A_k=0.485	cfm	143	192	238	286	335	381	429	478
	throw (ft)	2.0	4.0	5.0	6.5	7.5	9.0	10.0	11.0

Terminal velocity of 50 fpm.

©2021 Metal-Fab