MODEL: MSCD BUTTERFLY CEILING RADIATION DAMPER SQUARE/RECTANGULAR

FIRE AND CEILING RADIATION DAMPERS

UL CLASSIFIED
(SEE COMPLETE
MARKING ON PRODUCT)

MODEL MSCD: UL 555C Listed for 3-4 hours (ULC - S112.2)

Square or rectangular butterfly-type.

STANDARD CONSTRUCTION:

Frame:	Roll formed, 22 Ga. galvanized steel.
Blades:	22 Ga. galvanized steel.
Insulation:	Non-asbestos, ceramic blanket on sizes 80 sq. inches and up.
Spring:	Corrosion resistant steel spring.
Finish:	Mill galvanized.

OPTIONS:

Adjustable Volume Control

Fusible Link:	Replaceable 165°F or 212°F.
Outlet Transition:	Square to Round
Thermal Blanket:	TB5000, 24” x 24” x 1/8” non-asbestos, ceramic blanket.

SIZE LIMITATIONS:

Sizes:	Minimum: 3.75" W or 3.75" H. Minimum area: 24 sq. inch (nominal). Maximum 22" W x 22" H

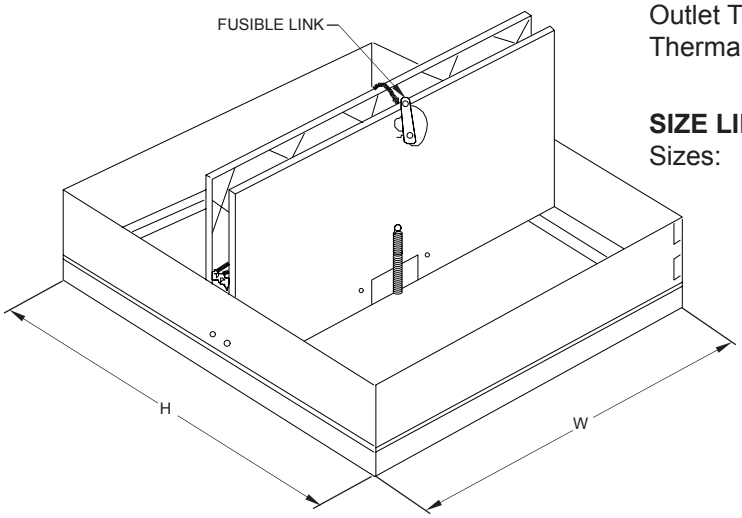

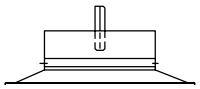

FOR INSTALLATION DIRECTLY OVER DIFFUSER NECK ORDER "ACTUAL SIZE" DAMPER.

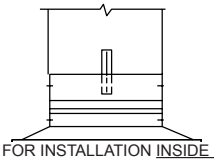

FOR INSTALLATION INSIDE DUCT, OR DIFFUSER NECK CHECK BOX ON ORDER FORM (I.E. SUBTRACT 1/4" FROM THE ACTUAL SIZE DAMPER.)

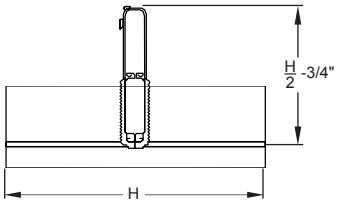

MODEL MSCD

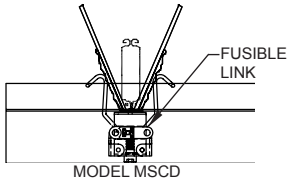

MODEL MSCD WITH ADJUSTABLE VOLUME CONTROL.

SUGGESTED SPECIFICATION

Square and rectangular butterfly type ceiling radiation dampers shall be by Metal-Fab. Ceiling dampers shall bear the Underwriters’ Laboratories label and be rated for ductless, flexible duct or steel duct air systems. Ceiling radiation dampers installed directly over ceiling diffuser necks shall require no external damper supports. Ceiling damper insulation shall be of the non-asbestos type. Ceiling dampers shall be furnished with a fusible link.

Project:	Contractor:
Location:	Address:
Architect:	P.O. Number:
Engineer:	Date:

©2016 Metal-Fab, Inc.